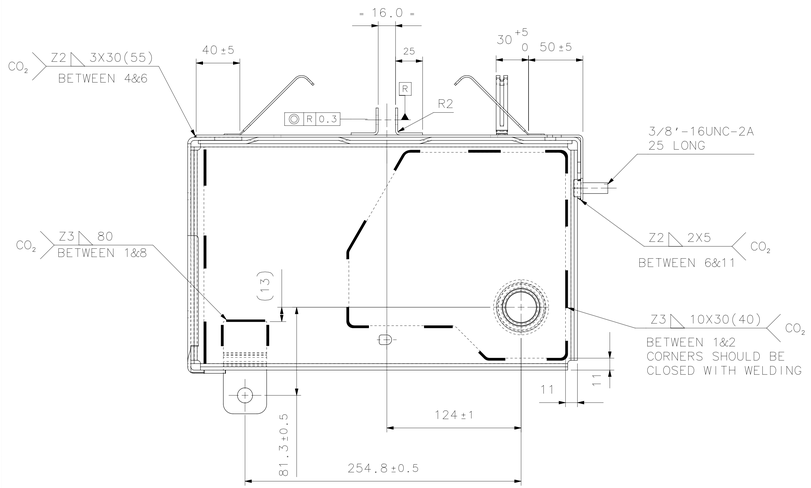

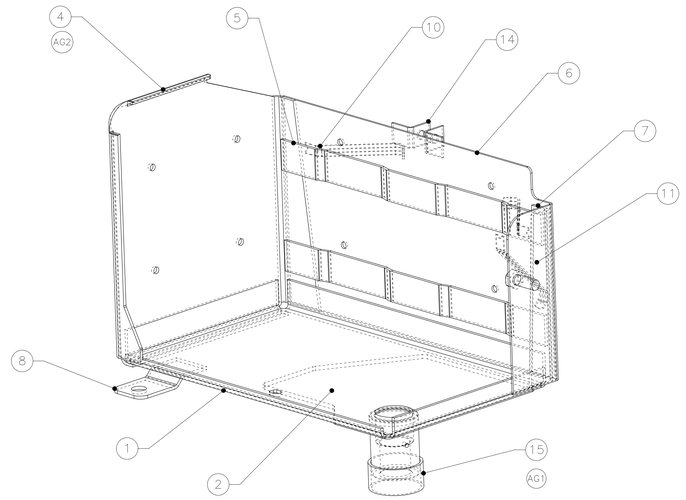

UNSPECIFIED TOLERANCES

1. FORMING TO FORMING
   - <500 ±0.5
   - >500 ±0.8
2. CD BETWEEN HOLES
   - IN ONE PLANE ±0.2
   - IN DIFF PLANES ±0.5
3. FORM TO PIERCE ±0.5
4. ANGULAR TOLERANCE ±1°
5. HOLE SIZES +0.2/-0
6. SLOT SIZES ±0.8
7. GENERAL TOLERANCE
   - UP TO 300 ±0.8
   - ABOVE 300 ±1.0
8. FLANGE WIDTH +1.0/-0.7
9. JOGGLE DEPTH +0.3/0

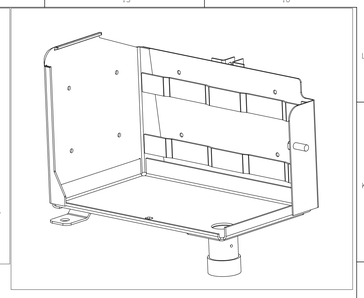

S NO	PART NO	DESCRIPTION	MATERIAL	QTY	WT
1	007530798D1	TRAY- BATTERY BOX	HRCS-0, THK 3	1	2.15
2	007530815D1	BASE PLATE BATTERY SUPPORT	HRCS-0, THK 4	1	0.96
~~3~~	~~007530819D1~~	~~BUSH BATTERY TRAY~~	~~FE410W~~	~~1~~	~~0.366~~
AG2 4	007530799D1	COVER LH-BATTERY BOX	HRCS-0, THK3	1	1.5
5	007530822D1	REAR STIFFNER	HRCS-0, THK 3	2	0.103
AG2 6	007530792D1	REAR COVER-BATTERY BOX	CRCS-0, THK 2	1	1.165
7	007530827D1	VERTICAL STIFFNER	HRCS-0, THK 3	1	0.191
8	007530820D2	STOPPER BKT BATTERY	HRCS-0, THK 3	1	0.08
~~9~~	~~007530828D1~~	~~STUD MOUNTING STIFFNER~~	~~HRCS-0, THK 3~~	~~1~~	~~0.24~~
10	000060811M01	HARNESS CLIP	STD	3	---
11	STD	STUD 3/8'- 16UNC-2A	STD	1	0.017
~~12~~	~~007530826D1~~	~~CLAVIS PIN-STUD LOCKING~~	~~Fe 410W~~	~~1~~	~~0.028~~
~~13~~	~~007530817D1~~	~~BUSH~~	~~PHOSPHOR BRONZE~~	~~1~~	~~0.085~~
14	007530495D1	PIVOT PLATE BATTERY BOX	HRCS-0, THK 2	2	0.014
AG1 15	007536277D91	BUSH ASSY	----	1	0.446

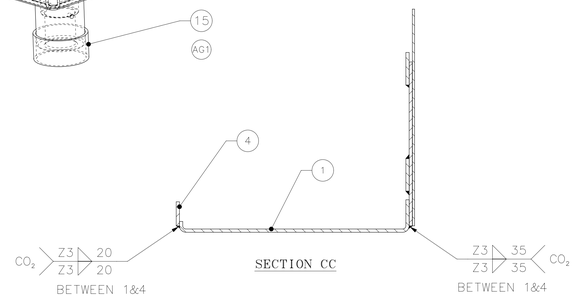

SECTION CC

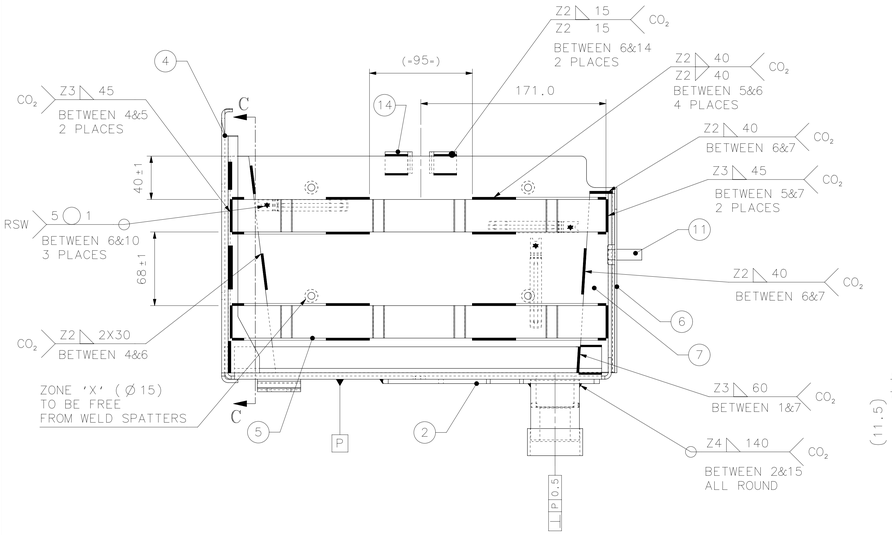

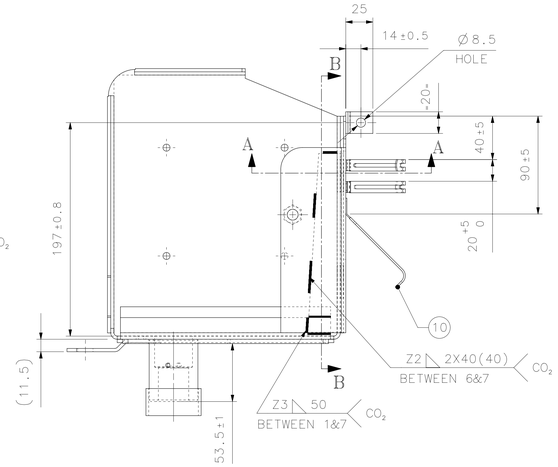

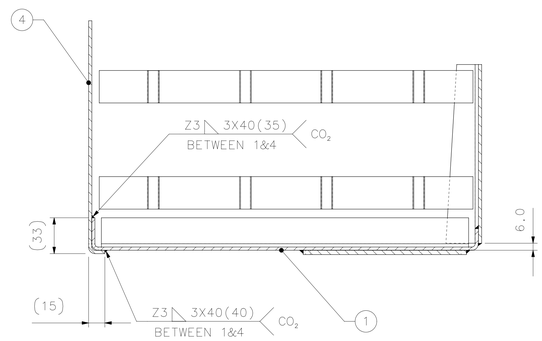

SECTION BB

BETWEEN	CO_2 WELDING			NO OF SPOTS
	Z2	Z3	Z4	
1&2	300			
1&4		350		
1&7		110		
1&8		80		
2&15			140	
4&5		90		
4&6	150			
5&6	320			
5&7		90		
6&7	160			
6&10				3
6&11	10			
6&14	60			

TOTAL CO_2 WELD LENGTH = 1860 mm AS PER PS 608
TOTAL SPOTS = 3 AS PER PS 625

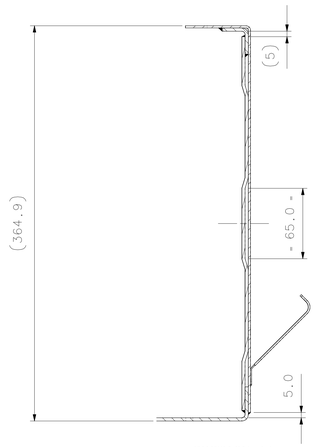

SECTION AA

NOTE:-

ALL UNSPECIFIED RADII SHOULD BE ONE METAL THICKNESS
PART MUST BE FREE FROM FRACTURE, FLASH & SHARP EDGES AND ANY SURFACE IMPERFECTIONS, THAT MAY AFFECT FIT OR FUNCTION OF THE PART.
PART MUST BE FREE OF STRETCHING, SCORING MARKS AND WRINKLES.

<SC> :SIGNIFICANT CHARACTERISTICS ▽:CRITICAL CHARACTERISTICS

BREAK SHARP CORNERS MAY BE EITHER A CHAMFER OR A RADIUS FROM 0.2 mm MIN. TO 1.0 mm MAX.
UNSPECIFIED TOLERANCES AS PER ISO-2768-1:1989

		DIMENSIONS								
LINEAR IN mm.	OVER	0.5	3	6	30	120	400	1000	2000	
	UPTO	3	6	30	120	400	1000	2000	4000	
f FINE	(0.05)	±0.05	±0.1	±0.1	±0.15	±0.2	±0.3	±0.5	-	
m MEDIUM	(0.1)	±0.1	±0.2	±0.3	±0.5	±0.8	±1.2	±2		
c COARSE	(0.2)	±0.2	±0.3	±0.8	±1.2	±2	±3	±4		
v VERY COARSE	(1)	-	±0.5	±1	±1.5	±2.5	±4	±6	±8	
ANGULAR IN deg.	LENGTH OF SHORTER SIDE OF THE ANGLE IN mm.									
	OVER		10	50	120	400				
	UPTO	10	50	120	400	-				
f FINE	(0.005)	±1°	±0° 30'	±0° 20'	±0° 10'	±0° 5'				
m MEDIUM	(0.01)	±1° 30'	±1°	±0° 30'	±0° 15'	±0° 10'				
c COARSE	(0.02)	±2°	±1°	±1°	±0° 30'	±0° 20'				
v VERY COARSE	(1)	±3°	±2°	±1°	±1° 30'	±1° 20'				

PART OF THIS DRAWING / DOCUMENT SHOULD NOT BE REPRODUCED IN ANY FORM OR BY ANY MEANS WITHOUT WRITTEN PERMISSION OF M & M LTD.
COMPUTER GENERATED DRAWING DO NOT CHANGE MANUALLY
IF IN DOUBT, ASK DO NOT SCALE DRG SIZE : A0

E.N.NO.	LET	LOC	REVISIONS	DSNR	DKR.	APPR.	DATE
		AG2	CHILD PARTS 007530799D1, 007530792D1 UPDATED				
ER171000404 9	AG1		SUB ASSEMBLY PART NO. 007536277D91 UPDATED.	PRP	NVC	RAW	13/01/18
600000010233	AF		REDRAWN WITH 3D REF.	PRP	NVC	RAW	05/08/15

MAHINDRA & MAHINDRA LIMITED
TRACTOR DIVISION
KANDIVLI(EAST), MUMBAI 400 101, INDIA.

E.R. / PROC.REQ.NO : 500000002958
PART NO. : 007530824D91
PART NAME : TRAY ASSY- BATTERY BOX
MATERIAL : HEAT TREATMENT :

	NAME	SIGN	DATE
CAD ENGG.			
DESIGNER	PKS		
CHECKER	RNM		
APPR.BY	DHM		

FIRST USED PROD. MODEL: 8000 2WD/4WD
SCALE 1:2
SHEET 1 OF 1
UNIT QTY. : 1
WEIGHT : 7.19 kg.
ALL DIMENSIONS ARE IN mm. CHECK DRG WITH LATEST CHANGE No